VIBE®

British Audio

CVEN®

RED SERIES

Component Speakers

CVEN 2.7” MIDRANGE

- CVEN2.7M-V4

Owners Manual

Congratulations on purchasing your VIBE speakers. Please read this manual in order to fully understand how to get the best results from this product and ensure that all advice on how to look after the product is followed.

Thank you for buying VIBE, we hope you enjoy listening to your product as much as we enjoyed creating it.

WARNING

DO NOT EXPOSE THIS PRODUCT TO DAMP OR MOISTURE - doing so may result in fire, shock or damage to the product.
BEFORE WIRING DISCONNECT THE CABLE FROM THE POSITIVE BATTERY TERMINAL - failure to do so may result in electric shock or injury.
ENSURE GOOD AND CORRECT CONNECTIONS - failure to make the correct connections may result in fire or damage to the product.
DO NOT USE ANY FUNCTIONS OF THIS EQUIPMENT THAT MAY TAKE YOUR CONCENTRATION AWAY FROM DRIVING YOUR VEHICLE - do not set up your amplifier whilst driving, doing so may result in an accident. For prolonged setting up, make sure that your vehicle is stationary and in a safe location.
KEEP THE VOLUME AT A LEVEL SO YOU CAN STILL HEAR OUTSIDE NOISE - failure to do this may result in an accident. VIBE equipment is capable of producing sound levels that can permanently damage your hearing. VIBE recommends caution when listening at high volume. For safe and enjoyable listening the sound should be comfortable and clear without distortion.

CAUTION
Never connect any speaker lead to the car chassis. This can cause severe damage to your speaker /car radio /amplifier.
Before drilling or cutting any holes, investigate the layout of your vehicle thoroughly.
Use caution when working near the fuel / hydraulic lines and electrical wiring.
Observe the correct polarity when wiring, improper phasing may cause a loss of bass response.
Ensure that no moving parts catch on the speaker or grill (e.g. window or door handles, or window glass inside the door)

Limited Warranty

All VIBE products carry a full 12 month warranty, valid from the date of the original receipt and proof of purchase (UK only). The online warranty card should be completed within seven days of the original purchase date. The original receipt and packaging should be retained for this twelve month period. If the product develops a problem any stage during the warranty period, it should be returned to the point of purchase in it's original packaging, and complete with no items missing.

A full description of VIBE's warranty information can be found on our website:
www.vibeaudio.co.uk

What Is Not Covered

- Damage to product due to improper installation.
- Subsequent damage to other components.
- Damage caused by exposure to moisture, excessive heat, chemical cleaners and / or UV radiation.
- Damage through negligence, misuse, accident or abuse. Repeated returns for the same fault may be considered abuse.
- Any cost or expense related to the removal and / or re-installation of the product.
- Damage caused by amplifier clipping or distortion.
- Items repaired or modified by any unauthorised repair facility.
- Return shipping on non defective items.
- Products returned without a returns authorisation number.
- Damage to product due to use of sealant.

International Warranty

Contact your international VIBE dealer or distributor concerning specific procedure for your country's warranty policies. www.vibeaudio.co.uk

Warning

VIBE equipment is capable of sound pressure levels that can cause permanent damage to your hearing and those around you. Please use common sense when listening to your audio system and practice safe sound.

Copyright

All content included in this manual such as text, graphics, logos, icons, images and data, are the property of Midbass Distribution Limited t/a VIBE Technologies Limited (herein referred to as "VIBE", "us" or "we") and its affiliate or their content and technology providers, and are protected by United Kingdom and International copyright laws. All rights reserved. VIBE TV, VIBE Arcade, Bass Box, Optisound, Cinesound, BlackAir, BlackBox, Space, LiteAir, SLICK, BlackDeath, Bubonic, Reaper, Anti-VIBE, FastPlug, BlackHole, QB69, VIBE Turbo Port, Vibe TurboVent, Pressure Board, Super Driver, VIBE Pulse, VIBE Power, VIBE Digital, VIBE MAG Plugs, Ferrite Loaded, VIBE Solid Core, VIBE OCC, VIBE FLAT, ICC, Bass Enhance, Bass Enhance+, QBass, SpeedBass, PowerBass, N-Wedge, Box Grip, ARBSS, Supercar Series and all stylised representations of product names, or the abbreviations of product names, as logos are all trademarks of VIBE. Graphics and logos are trademarks or trade dress of VIBE Technologies Ltd or its subsidiaries. VIBE's trademarks and trade dress may not be used in connection with any product or service that is not VIBE's, in any manner that is likely to cause confusion among customers or in any manner that disparages or discredits VIBE. All other trademarks not owned by VIBE or its subsidiaries that appear in this manual are the property of their respective owners, who may or may not be affiliated with, connected to, or sponsored by VIBE or its subsidiaries.

TO THE FULLEST EXTENT PERMITTED AT LAW, VIBE IS PROVIDING THIS MANUAL AND ITS CONTENT ON AN "AS IS" BASIS AND MAKES NO (AND EXPRESSLY DISCLAIMS ALL) REPRESENTATIONS OR WARRANTIES OF ANY KIND, EXPRESS OR IMPLIED, WITH RESPECT TO THIS MANUAL OR THE INFORMATION, CONTENT, MATERIALS OR PRODUCTS INCLUDED IN THIS MANUAL INCLUDING, WITHOUT LIMITATION, WARRANTIES OF MERCHANTABILITY AND FITNESS FOR A PARTICULAR PURPOSE. IN ADDITION, VIBE DOES NOT REPRESENT OR WARRANT THAT THE INFORMATION CONTAINED IN THIS MANUAL IS COMPLETE OR CURRENT, AND THAT ALL SPECIFICATIONS AND INFORMATION CONTAINED WITHIN THIS MANUAL ARE SUBJECT TO CHANGE WITHOUT NOTICE. VIBE RECOMMEND CAUTION WHEN LISTENING TO MUSIC REPRODUCED THROUGH VIBE EQUIPMENT. VIBE EQUIPMENT IS CAPABLE OF PRODUCING SOUND AND SOUND PRESSURE LEVELS THAT CAN PERMANENTLY DAMAGE HEARING OF YOU AND THAT OF OTHERS. FOR SAFE AND ENJOYABLE LISTENING, THE SOUND SHOULD BE CLEAR WITHOUT DISTORTION AT A COMFORTABLE VOLUME. BY USING ANY VIBE EQUIPMENT, YOU AGREE TO TAKE FULL RESPONSIBILITY FOR YOUR OWN SAFETY AND THE SAFETY OF OTHERS WHEN LISTENING TO MUSIC AT HIGH VOLUMES THROUGH EQUIPMENT YOU HAVE PURCHASED. USE OF ANY VIBE EQUIPMENT CONSTITUTES AGREEMENT TO THIS DISCLAIMER. Except as specifically stated in this manual, to the fullest extent permitted at law, neither VIBE nor any of its affiliates, directors, employees or other representatives will be liable for damages arising out of or in connection with the use of this manual or the information, content, materials or products included. This is a comprehensive limitation of liability that applies to all damages of any kind, including (without limitation) compensatory, direct, indirect or consequential damages, loss of data, income or profit, loss of or damage to property and claims of third parties. For the avoidance of doubt, VIBE does not limit its liability for death or personal injury to the extent only that it arises as a result of negligence of VIBE, its affiliates, directors, employees or other representatives.

Speaker Installation

Firstly, make sure that the speakers will fit in your chosen location. This may involve the removal of the standard vehicle speakers. Please use the mounting depth and hole cut dimensions as detailed in this manual for guidance.

- If necessary cut any material away to allow the speaker to sit correctly.
- Cut out the mounting hole and pre-drill any other fixing holes.

Installation Guide CVEN2.7M-V4 :

Rear Panel Mount

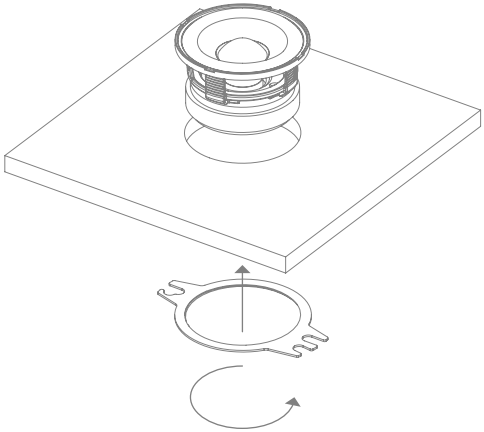

Front Panel Mount

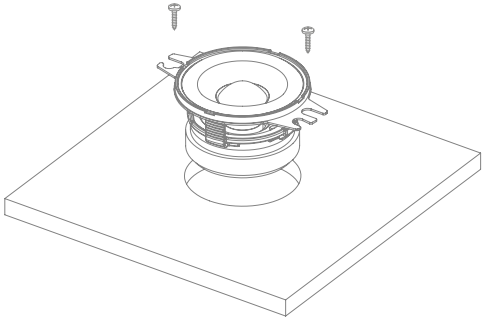

Specifications

Model	CVEN2.7M-V4
Type	Midrange
Configuration	1-way
Speaker Size	2.75" (70mm)
Peak/RMS Power	80W / 40W
Sensitivity	82dB
Freq. Response	500Hz - 16kHz
Impedance	4Ω
Mount. Depth	1.5" (39mm)
Mount. Diameter	2.4" (61mm)

TS Parameters

Parameter	CVEN2.7M-V4
Fs (Hz)	147.1
Vas (L)	0.4138
Re (Ω)	3.2
Qms	5.928
Qes	1.396
Qts	1.129
BL (Tm)	2.1737
SPL (dB)	81.8
Cms (mm/N)	0.525
Mms (G)	2.229
Rms (Ωm)	0.3477
Mmd (G)	2.164
Zmin (Ω)	4.325
Zavg (Ω)	6.7905

Response Graphs

CVEN2.7M-V4

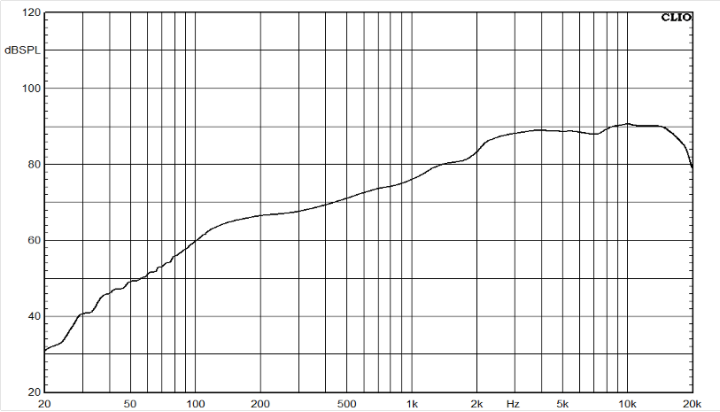

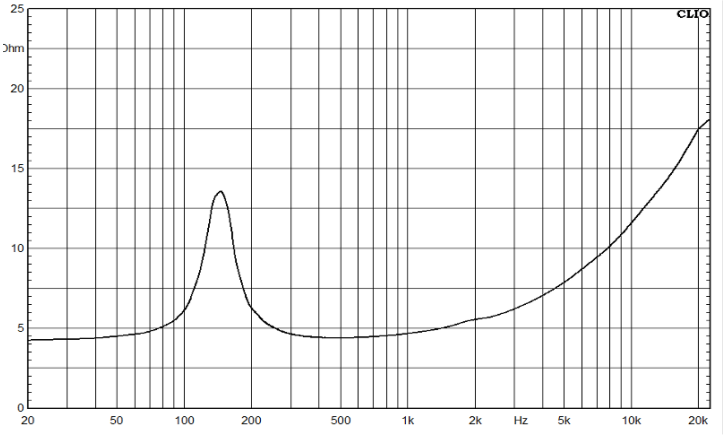

International Technical Enquiries

For international technical support please contact the distribution agent for your country.
Please email **export@midbass.com** for more details.

UK Technical Enquiries

Call 0121 311 9090 : Option 4
Or email **technical@midbass.com**
Hours of business 9.00am - 5.30pm GMT Monday - Friday.
All calls are recorded for training purposes.
MIDBASS Distribution
PO Box 11000
B75 7WG

British Audio

Designed and engineered in England

www.vibeaudio.co.uk

www.youtube.com/vibeaudio

www.facebook.com/vibeaudio

www.instagram.com/vibeaudio