British Audio

POWERBOX 60.2
POWERBOX60.2-V9

POWERBOX 60.4
POWERBOX60.4-V9

POWERBOX 80.4
POWERBOX80.4-V9

POWERBOX 100.4
POWERBOX100.4-V9

POWERBOX 250.2
POWERBOX250.2-V0

Power box

Power Amplifiers

Owners Manual

Congratulations on purchasing your VIBE amplifier. Please read this manual in order to fully understand how to get the best results from this product and ensure that all advice on how to look after the product is followed.

Thank you for buying VIBE, we hope you enjoy listening to your product as much as we enjoyed creating it.

Attention

An aftermarket audio amplifier will place an additional load on the vehicles charging system.
Most modern vehicles have sufficient capacity in the charging system as not all the electrical components of the vehicle will be switched on at once.

Check the fuse rating of the amplifier and use this as the peak current requirement.

Generally the continuous current draw will be a third of the peak current.

Warning

During the normal use of this amplifier the heatsink may become very hot.
Please do not touch during or immediately after use.
Please ensure that when installing this product the heatsink will not come into contact with any materials that may be damaged by heat such as upholstery or plastics.

Limited Warranty

All VIBE products carry a full 12 month warranty, valid from the date of the original receipt and proof of purchase. The online warranty card should be completed within seven days of the original purchase date. The original receipt and packaging should be retained for this twelve month period. If the product develops a problem any stage during the warranty period, it should be returned to the point of purchase in it's original packaging, and complete with no items missing. If the store is unable to repair the product it may have to be returned to VIBE.
A full description of VIBE's warranty information can be found on our website:
www.vibeaudio.co.uk

What Is Not Covered

- Damage to product due to improper installation.
- Subsequent damage to other components.
- Damage caused by exposure to moisture, excessive heat, chemical cleaners and / or UV radiation.
- Damage through negligence, misuse, accident or abuse. Repeated returns for the same fault may be considered abuse.
- Any cost or expense related to the removal and / or re-installation of the product.
- Damage caused by amplifier clipping or distortion.
- Items repaired or modified by any unauthorised repair facility.
- Return shipping on non defective items.
- Products returned without a returns authorisation number.
- Damage to product due to use of sealant.

International Warranty

Contact your international VIBE dealer or distributor concerning specific procedure for your country's warranty policies. www.vibeaudio.co.uk/warranty

Warning

VIBE equipment is capable of sound pressure levels that can cause permanent damage to your hearing and those around you. Please use common sense when listening to your audio system and practice safe sound.

Copyright

All content included in this manual such as text, graphics, logos, icons, images and data, are the property of Midbass Distribution Limited t/a VIBE Technologies Limited (herein referred to as "VIBE", "us" or "we") and its affiliate or their content and technology providers, and are protected by United Kingdom and International copyright laws. All rights reserved. VIBE TV, VIBE Arcade, Bass Box, Optisound, Cinesound, BlackAir, BlackBox, Space, LiteAir, SLICK, BlackDeath, Bubonic, Reaper, Anti-VIBE, FastPlug, BlackHole, QB69, VIBE Turbo Port, Vibe TurboVent, Pressure Board, Super Driver, VIBE Pulse, VIBE Power, VIBE Digital, VIBE MAG Plugs, Ferrite Loaded, VIBE Solid Core, VIBE OCC, VIBE FLAT, ICC, Bass Enhance, Bass Enhance+, QBass, SpeedBass, PowerBass, N-Wedge, Box Grip, ARBSS, Supercar Series and all stylised representations of product names, or the abbreviations of product names, as logos are all trademarks of VIBE. Graphics and logos are trademarks or trade dress of VIBE Technologies Ltd or its subsidiaries. VIBE's trademarks and trade dress may not be used in connection with any product or service that is not VIBE's, in any manner that is likely to cause confusion among customers or in any manner that disparages or discredits VIBE. All other trademarks not owned by VIBE or its subsidiaries that appear in this manual are the property of their respective owners, who may or may not be affiliated with, connected to, or sponsored by VIBE or its subsidiaries.
TO THE FULLEST EXTENT PERMITTED AT LAW, VIBE IS PROVIDING THIS MANUAL AND ITS CONTENT ON AN "AS IS" BASIS AND MAKES NO (AND EXPRESSLY DISCLAIMS ALL) REPRESENTATIONS OR WARRANTIES OF ANY KIND, EXPRESS OR IMPLIED, WITH RESPECT TO THIS MANUAL OR THE INFORMATION, CONTENT, MATERIALS OR PRODUCTS INCLUDED IN THIS MANUAL INCLUDING, WITHOUT LIMITATION, WARRANTIES OF MERCHANTABILITY AND FITNESS FOR A PARTICULAR PURPOSE. IN ADDITION, VIBE DOES NOT REPRESENT OR WARRANT THAT THE INFORMATION CONTAINED IN THIS MANUAL IS COMPLETE OR CURRENT, AND THAT ALL SPECIFICATIONS AND INFORMATION CONTAINED WITHIN THIS MANUAL ARE SUBJECT TO CHANGE WITHOUT NOTICE. VIBE RECOMMEND CAUTION WHEN LISTENING TO MUSIC REPRODUCED THROUGH VIBE EQUIPMENT. VIBE EQUIPMENT IS CAPABLE OF PRODUCING SOUND AND SOUND PRESSURE LEVELS THAT CAN PERMANENTLY DAMAGE HEARING OF YOU AND THAT OF OTHERS. FOR SAFE AND ENJOYABLE LISTENING, THE SOUND SHOULD BE CLEAR WITHOUT DISTORTION AT A COMFORTABLE VOLUME. BY USING ANY VIBE EQUIPMENT, YOU AGREE TO TAKE FULL RESPONSIBILITY FOR YOUR OWN SAFETY AND THE SAFETY OF OTHERS WHEN LISTENING TO MUSIC AT HIGH VOLUMES THROUGH EQUIPMENT YOU HAVE PURCHASED. USE OF ANY VIBE EQUIPMENT CONSTITUTES AGREEMENT TO THIS DISCLAIMER. Except as specifically stated in this manual, to the fullest extent permitted at law, neither VIBE nor any of its affiliates, directors, employees or other representatives will be liable for damages arising out of or in connection with the use of this manual or the information, content, materials or products included. This is a comprehensive limitation of liability that applies to all damages of any kind, including (without limitation) compensatory, direct, indirect or consequential damages, loss of data, income or profit, loss of or damage to property and claims of third parties. For the avoidance of doubt, VIBE does not limit its liability for death or personal injury to the extent only that it arises as a result of negligence of VIBE, its affiliates, directors, employees or other representatives.

Mounting Guidelines

Your VIBE amplifier is designed with a swift installation routine in mind.

Please mount the amplifier in a dry location on a solid surface.
NEVER mount the amplifier upside down as this will cause the amplifier to over heat and will eventually damage the amplifier.

Before fixing the amplifier in place please ensure that there is sufficient air flow around the exterior of the casing, at least two inches is sufficient to allow effective cooling.

Power Connections

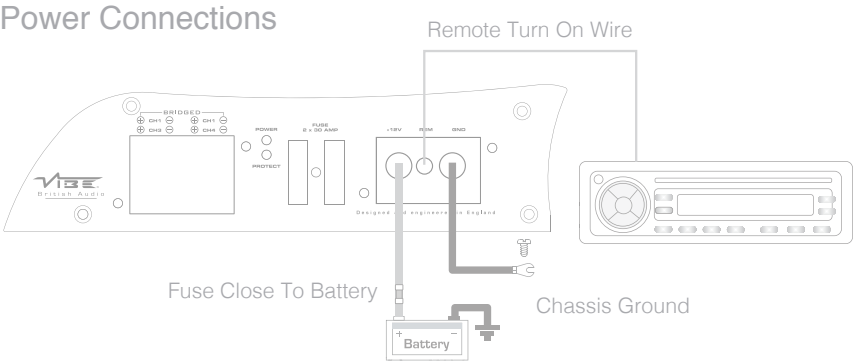

Low Level Input

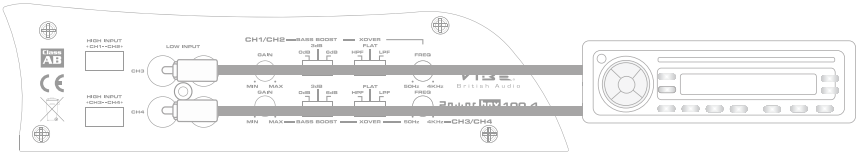

High Level Input

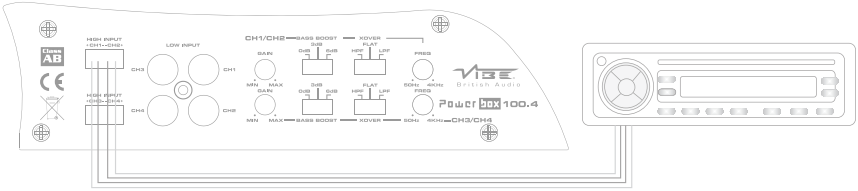

NOTE : When using high level input it is not necessary to connect the remote turn on wire.
Do not connect both high level and low level input at the same time.

Power Cable

- At least 8 gauge cable should be used for the power connection to the amplifier.

- The power cable should be taken directly from the battery. Rubber grommets should be used when passing through any bulkheads to prevent the cable from becoming chaffed or cut.

- It is vital that a fuse / circuit breaker (of at least equal value to the one fitted in the amplifier) is placed inline with the power cable and is no further than 18 inches away from the battery.

- Please ensure that the fuse is not fitted until the entire installation procedure is complete.

Ground Cable

- At least 8 gauge cable should be used for the ground connection to the amplifier.

- The amplifier ground should be connected directly to the chassis of the vehicle, to bare metal.

- The cable length should be kept to an absolute minimum.

- It is not recommended that you connect the ground cable to the vehicles seatbelts anchor point.

Auto Turn On (High level Input Only)

- The PowerBox amplifiers feature an auto turn on circuit called Autosense.

- This circuit allows the amplifier to switch on and off without a remote turn on wire when using high level input, for low level input (RCA) it will still be necessary to connect the remote turn on wire from the headunit.

- When the connected source (headunit) is turned on the amplifier will turn on automatically, after the connected source (headunit) is turned off the amplifier will shut down.

RCA Cables

- Depending on the model of your headunit and the number of speakers you wish to power you will have to run either one, two or three RCA cables from the source to the amplifier.

- Please take extra care when running these cables from the source to the amplifier. Ensure that they are placed away from all items that can generate any interference, wiring harnesses etc.

- It is recommended that the RCA cables should be run on opposite sides of the car to the previously installed power cables if possible, to avoid the cable picking up interference.

Powerbox 60.2, Powerbox 250.2

Terminals And Connections

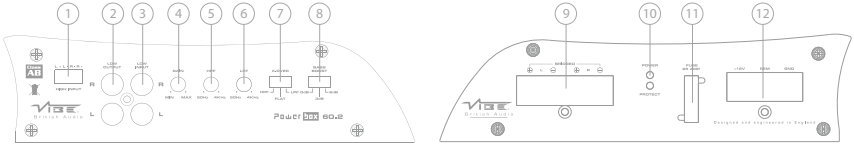

1. High level input
For connection to the speaker output of your source (head unit). This is to be used if the source (headunit) does not have a low level output.
2. Low level output
RCA output used to connect an additional amplifier or audio device.
3. Low level input
For connection to any source (head unit) with a low level output. This is your RCA output from the source (headunit)
4. Gain control
This control is used to match the input signal of the source to the amplifier. See the setup section for more details.
5. High Pass Filter (HPF)
This control is used to set the crossover frequency for the amplifier when HPF is selected. The frequency is adjustable between 50Hz and 4kHz.
6. Low Pass Filter (LPF)
This control is used to set the crossover frequency for the amplifier when LPF is selected. The frequency is adjustable between 50Hz and 4kHz.
7. Crossover mode select switch
This control is used to select the crossover mode of the amplifier. FLAT is for full range output, HPF is used to limit the amount of low frequency information passed to the speakers and LPF is used to limit the amount of high frequency information passed to the speakers.
8. Bass boost select switch
This control is used to add bass boost to the amplifier centred at 45Hz. 0dB, +3dB, +6dB settings are selectable.
9. Speaker terminals
Used to connect speaker cables to the amplifier. See the wiring configuration section for more details
10. Power / protect LED
If the amplifier is operating normally, the GREEN LED will illuminate.
If the amplifier is in protection mode the RED LED will illuminate.
11. Fuse
Replace with only the same value ATC fuse.
60.2 : 1 x 25A, 250.2 : 2 x 30A
12. Power terminals
Used to connect DC power to the amplifier. See the power connections section for more details

Powerbox 60.2, Powerbox 250.2

Stereo Wiring Configuration

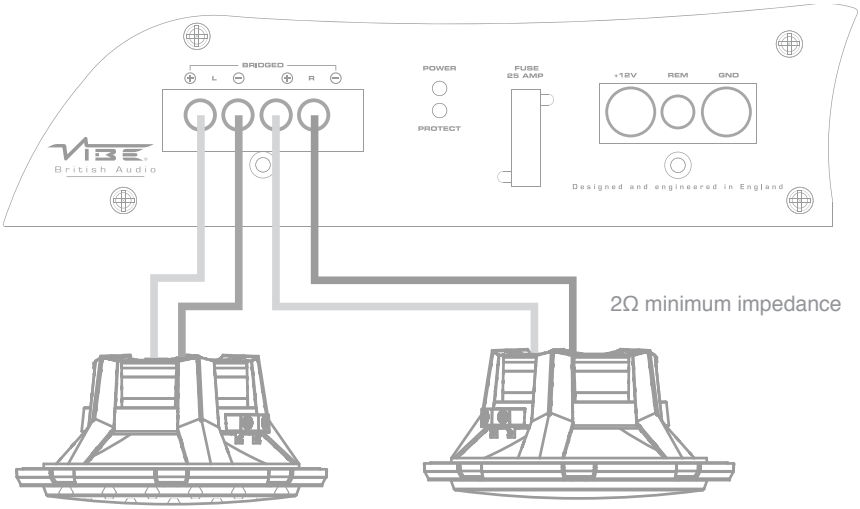

Bridged Wiring Configuration

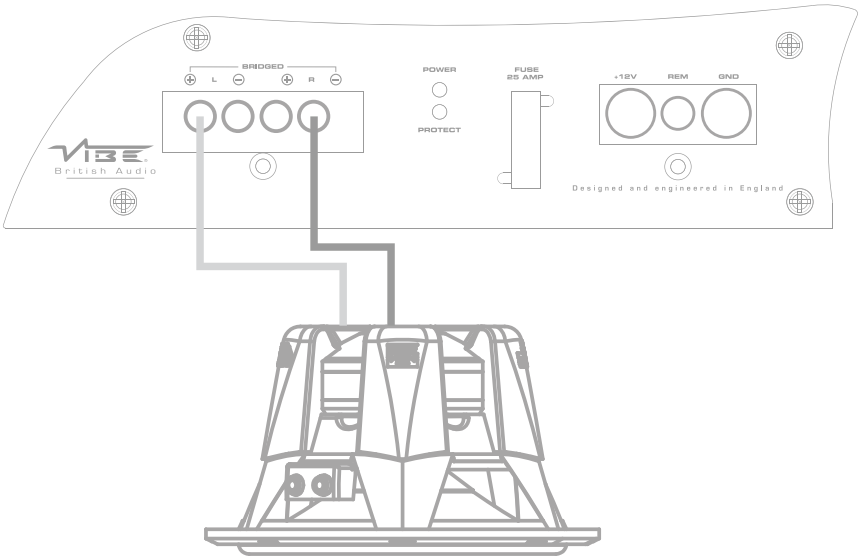

4Ω minimum impedance

Powerbox 60.4, Powerbox 80.4, Powerbox 100.4

Terminals And Connections

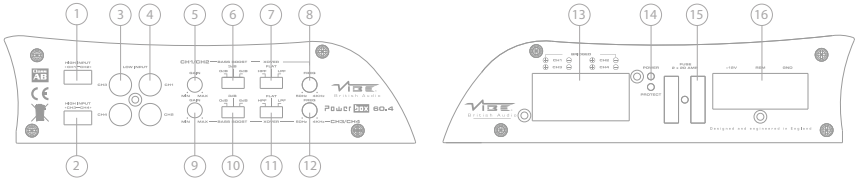

1. CH1 / CH2 high level input
For connection to the speaker output of your source (head unit). This is to be used if the source (headunit) does not have a low level output.
2. CH3 / CH4 high level input
For connection to the speaker output of your source (head unit). This is to be used if the source (headunit) does not have a low level output.
3. CH3 / CH4 low level input
For connection to any source (head unit) with a low level output to the rear channels of the amplifier. This is your RCA output from the source (headunit)
4. CH1 / CH2 low level input
For connection to any source (head unit) with a low level output to the rear channels of the amplifier. This is your RCA output from the source (headunit)
5. CH1 / CH2 gain control
This control is used to match the input signal of the source to the front channels of the amplifier. See the setup section for more details.
6. CH1 / CH2 bass boost select switch
This control is used to add bass boost to the rear channels of the amplifier centred at 45Hz. 0dB, +3dB, +6dB settings are selectable.
7. CH1 / CH2 crossover mode select switch
This control is used to select the crossover mode of the rear channels of the amplifier. FLAT is for full range output, HPF is used to limit the amount of low frequency information passed to the speakers and LPF is used to limit the amount of high frequency information passed to the speakers.
8. CH1 / CH2 crossover frequency control
This control is used to set the crossover frequency for the rear channels of the amplifier when either HPF or LPF is selected. The frequency is adjustable between 50Hz and 4kHz.
9. CH3 / CH4 gain control
This control is used to match the input signal of the source to the front channels of the amplifier. See the setup section for more details.
10. CH3 / CH4 bass boost select switch
This control is used to add bass boost to the rear channels of the amplifier centred at 45Hz. 0dB, +3dB, +6dB settings are selectable.
11. CH3 / CH4 crossover mode select switch
This control is used to select the crossover mode of the rear channels of the amplifier. FLAT is for full range output, HPF is used to limit the amount of low frequency information passed to the speakers and LPF is used to limit the amount of high frequency information passed to the speakers.
12. CH3 / CH4 crossover frequency control
This control is used to set the crossover frequency for the rear channels of the amplifier when either HPF or LPF is selected. The frequency is adjustable between 50Hz and 4kHz.
13. Speaker terminals
Used to connect speaker cables to the amplifier. See the wiring configuration section for more details
14. Power / protect LED
If the amplifier is operating normally, the GREEN LED will illuminate.
If the amplifier is in protection mode the RED LED will illuminate.
15. Fuse
Replace with only the same value ATC fuse : 60.4 : 2 x 20A, 80.4 : 2 x 25A, 100.4 : 2 x 30A
16. Power terminals
Used to connect DC power to the amplifier. See the power connections section for more details

Powerbox 60.4, Powerbox 80.4, Powerbox 100.4

4 Channel Wiring Configuration

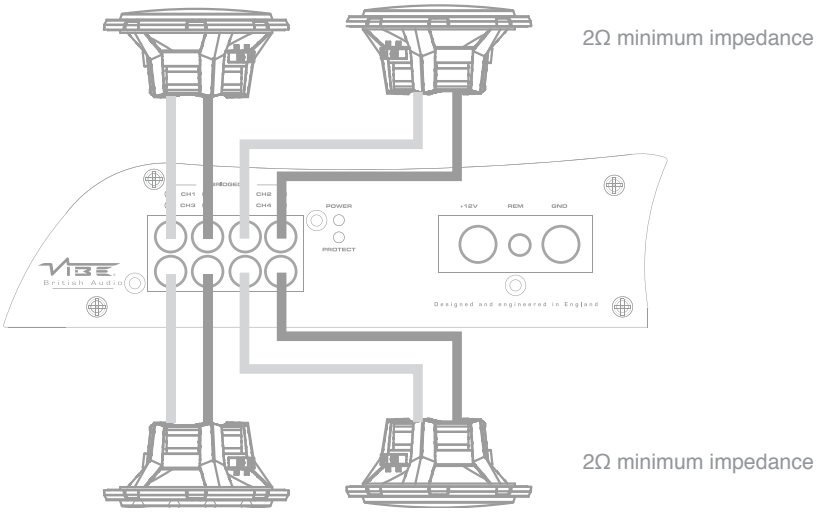

Bridged Wiring Configuration

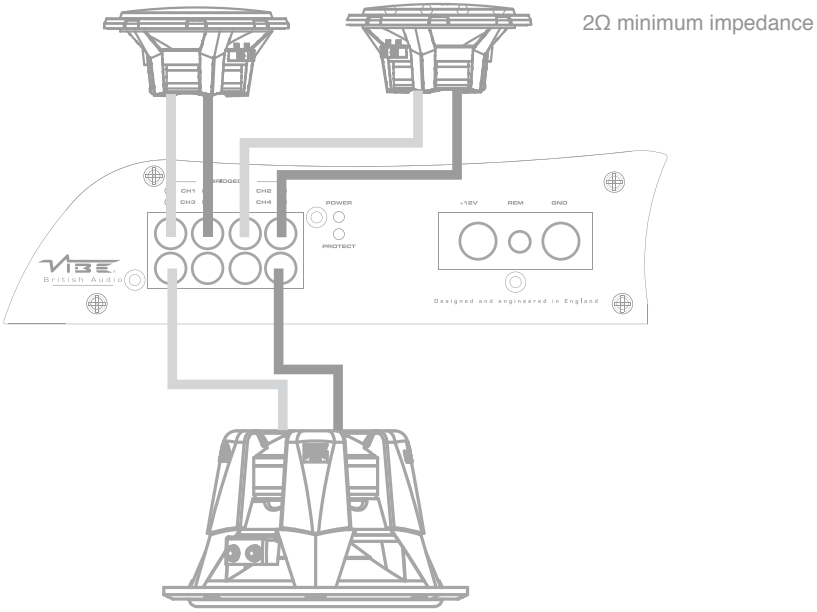

4Ω minimum impedance

Specification

Model	POWERBOX60.4-V9	POWERBOX80.4-V9	POWERBOX100.4-V9
Configuration	4 channel	4 channel	4 channel
Dimensions (H x W x D)	2″ x 12.1″ x 7.6″ (50mm x 309mm x 194mm)	2″ x 12.1″ x 7.6″ (50mm x 309mm x 194mm)	2″ x 13.3″ x 7.6″ (50mm x 338mm x 194mm)
RMS @ 4Ω Stereo	4 x 60 watts	4 x 80 watts	4 x 100 watts
RMS @ 2Ω Stereo	4 x 80 watts	4 x 100 watts	4 x 120 watts
RMS @ 4Ω Mono	2 x 160 watts	2 x 200 watts	2 x 240 watts
Maximum Power	640 watts	800 watts	960 watts
Frequency Response	20Hz - 20kHz	20Hz - 20kHz	20Hz - 20kHz
Crossover Type	LP / HP / Flat	LP / HP / Flat	LP / HP / Flat
Crossover Range	50Hz - 4kHz	50Hz - 4kHz	50Hz - 4kHz
Topology	Class AB	Class AB	Class AB

Model	POWERBOX60.2-V9	POWERBOX250.2-V0
Configuration	2 channel	2 channel
Dimensions (H x W x D)	2″ x 9″ x 7.6″ (50mm x 229mm x 194mm)	2″ x 13.8″ x 7.6″ (50mm x 338mm x 194mm)
RMS @ 4Ω Stereo	2 x 60 watts	2 x 250 watts
RMS @ 2Ω Stereo	2 x 80 watts	2 x 350 watts
RMS @ 4Ω Mono	1 x 160 watts	1 x 700 watts
Maximum Power	320 watts	1400 watts
Frequency Response	20Hz - 20kHz	20Hz - 20kHz
Crossover Type	LP / HP / Flat	LP / HP / Flat
Crossover Range	50Hz - 4kHz	50Hz - 4kHz
Topology	Class AB	Class AB

UK Technical Enquiries

Call 09067031420

Calls cost 50p per minute. Call costs correct at date of publication (01/02/12)
Hours of business 9.00am - 5.30pm GMT Monday - Friday.
All calls are recorded for training purposes.
MIDBASS Distribution
PO Box 11000
B75 7WG

International Technical Enquiries

For international technical support please contact the distribution agent for your country.

Please visit **www.vibeaudio.co.uk/contact** for more details.

VIBE®

British Audio

Power box

Designed and engineered in England

EAC

www.vibeaudio.co.uk

www.youtube.com/vibeaudio

www.facebook.com/vibeaudio

www.twitter.com/vibecaraudio