VIBE®

British Audio

BLACKAIR 10 SQ

- BA10SQ-V4

BLACKAIR 10 ACTIVE SQ

- BA10ASQ-V4

black air

SQ BASS ENCLOSURE

Owners Manual

Congratulations on purchasing your VIBE enclosure. Please read this manual in order to fully understand how to get the best results from this product and ensure that all advice on how to look after the product is followed.

Thank you for buying VIBE, we hope you enjoy listening to your product as much as we enjoyed creating it.

Attention

An aftermarket audio amplifier will place an additional load on the vehicles charging system.
Most modern vehicles have sufficient capacity in the charging system as not all the electrical components of the vehicle will be switched on at once.

Check the fuse rating of the amplifier and use this as the peak current requirement.

Generally the continuous current draw will be a third of the peak current.

Warning

During the normal use of this enclosure, the heatsink may become very hot.
Please do not touch during or immediately after use.
Please ensure that when installing this product the heatsink will not come into contact with any materials that may be damaged by heat such as upholstery or plastics.

Limited Warranty

All VIBE products carry a full 12 month warranty, valid from the date of the original receipt and proof of purchase. The online warranty card should be completed within seven days of the original purchase date. The original receipt and packaging should be retained for this twelve month period. If the product develops a problem any stage during the warranty period, it should be returned to the point of purchase in it's original packaging, and complete with no items missing. If the store is unable to repair the product it may have to be returned to VIBE.
A full description of VIBE's warranty information can be found on our website:
www.vibeaudio.co.uk

What Is Not Covered

- Damage to product due to improper installation.
- Subsequent damage to other components.
- Damage caused by exposure to moisture, excessive heat, chemical cleaners and / or UV radiation.
- Damage through negligence, misuse, accident or abuse. Repeated returns for the same fault may be considered abuse.
- Any cost or expense related to the removal and / or re-installation of the product.
- Damage caused by amplifier clipping or distortion.
- Items repaired or modified by any unauthorised repair facility.
- Return shipping on non defective items.
- Products returned without a returns authorisation number.
- Damage to product due to use of sealant.

International Warranty

Contact your international VIBE dealer or distributor concerning specific procedure for your country's warranty policies. www.vibeaudio.co.uk/warranty

Warning

VIBE equipment is capable of sound pressure levels that can cause permanent damage to your hearing and those around you. Please use common sense when listening to your audio system and practice safe sound.

Copyright

All content included in this manual such as text, graphics, logos, icons, images and data, are the property of Midbass Distribution Limited t/a VIBE Technologies Limited (herein referred to as "VIBE", "us" or "we") and its affiliate or their content and technology providers, and are protected by United Kingdom and International copyright laws. All rights reserved. VIBE TV, VIBE Arcade, Bass Box, Optisound, Cinesound, BlackAir, BlackBox, Space, LiteAir, SLICK, BlackDeath, Bubonic, Reaper, Anti-VIBE, FastPlug, BlackHole, QB69, VIBE Turbo Port, Vibe TurboVent, Pressure Board, Super Driver, VIBE Pulse, VIBE Power, VIBE Digital, VIBE MAG Plugs, Ferrite Loaded, VIBE Solid Core, VIBE OCC, VIBE FLAT, ICC, Bass Enhance, Bass Enhance+, QBass, SpeedBass, PowerBass, N-Wedge, Box Grip, ARBSS, Supercar Series and all stylised representations of product names, or the abbreviations of product names, as logos are all trademarks of VIBE. Graphics and logos are trademarks or trade dress of VIBE Technologies Ltd or its subsidiaries. VIBE's trademarks and trade dress may not be used in connection with any product or service that is not VIBE's, in any manner that is likely to cause confusion among customers or in any manner that disparages or discredits VIBE. All other trademarks not owned by VIBE or its subsidiaries that appear in this manual are the property of their respective owners, who may or may not be affiliated with, connected to, or sponsored by VIBE or its subsidiaries.
TO THE FULLEST EXTENT PERMITTED AT LAW, VIBE IS PROVIDING THIS MANUAL AND ITS CONTENT ON AN "AS IS" BASIS AND MAKES NO (AND EXPRESSLY DISCLAIMS ALL) REPRESENTATIONS OR WARRANTIES OF ANY KIND, EXPRESS OR IMPLIED, WITH RESPECT TO THIS MANUAL OR THE INFORMATION, CONTENT, MATERIALS OR PRODUCTS INCLUDED IN THIS MANUAL INCLUDING, WITHOUT LIMITATION, WARRANTIES OF MERCHANTABILITY AND FITNESS FOR A PARTICULAR PURPOSE. IN ADDITION, VIBE DOES NOT REPRESENT OR WARRANT THAT THE INFORMATION CONTAINED IN THIS MANUAL IS COMPLETE OR CURRENT, AND THAT ALL SPECIFICATIONS AND INFORMATION CONTAINED WITHIN THIS MANUAL ARE SUBJECT TO CHANGE WITHOUT NOTICE. VIBE RECOMMEND CAUTION WHEN LISTENING TO MUSIC REPRODUCED THROUGH VIBE EQUIPMENT. VIBE EQUIPMENT IS CAPABLE OF PRODUCING SOUND AND SOUND PRESSURE LEVELS THAT CAN PERMANENTLY DAMAGE HEARING OF YOU AND THAT OF OTHERS. FOR SAFE AND ENJOYABLE LISTENING, THE SOUND SHOULD BE CLEAR WITHOUT DISTORTION AT A COMFORTABLE VOLUME. BY USING ANY VIBE EQUIPMENT, YOU AGREE TO TAKE FULL RESPONSIBILITY FOR YOUR OWN SAFETY AND THE SAFETY OF OTHERS WHEN LISTENING TO MUSIC AT HIGH VOLUMES THROUGH EQUIPMENT YOU HAVE PURCHASED. USE OF ANY VIBE EQUIPMENT CONSTITUTES AGREEMENT TO THIS DISCLAIMER. Except as specifically stated in this manual, to the fullest extent permitted at law, neither VIBE nor any of its affiliates, directors, employees or other representatives will be liable for damages arising out of or in connection with the use of this manual or the information, content, materials or products included. This is a comprehensive limitation of liability that applies to all damages of any kind, including (without limitation) compensatory, direct, indirect or consequential damages, loss of data, income or profit, loss of or damage to property and claims of third parties. For the avoidance of doubt, VIBE does not limit its liability for death or personal injury to the extent only that it arises as a result of negligence of VIBE, its affiliates, directors, employees or other representatives.

Mounting Guidelines

Your VIBE enclosure is designed with a swift installation routine in mind.

Please mount the enclosure in a dry location on a solid surface.
NEVER mount the enclosure upside down as this will cause the amplifier to over heat (BA10ASQ-V4) and will eventually damage the amplifier.

Before fixing the enclosure in place please ensure that there is sufficient air flow around the exterior of the casing, at least two inches is sufficient to allow effective cooling.

The enclosure is fitted with proprietary ARBSS (Anti Resonance Bass Support System) standoffs that have a velcro pad inset allowing the enclosure to adhere to most trunk carpet.

If a more secure mounting is required, the ARBSS can be rotated to reveal a screw mounting point that allows the enclosure to be screwed into a desired mounting place using the supplied screws.

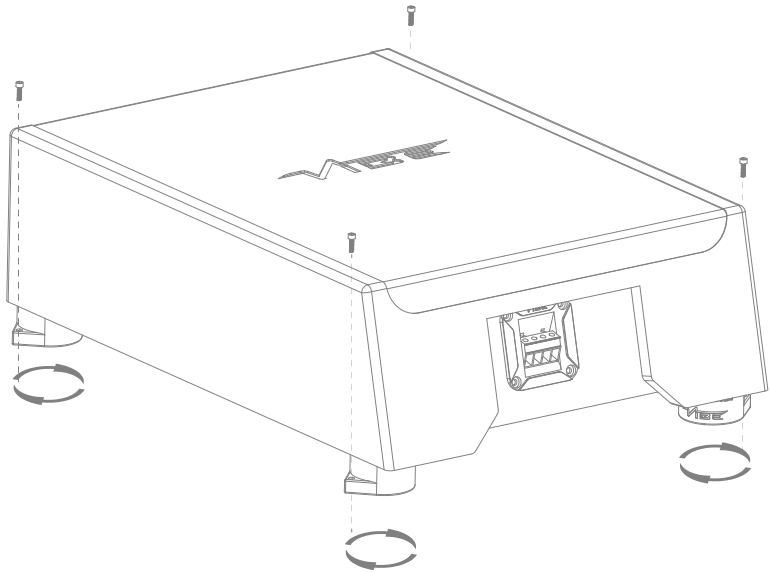

Wiring Diagram (BA10SQ-V4)

The BA10SQ-V4 is fitted with a dual 2Ω subwoofer and can be configured for either 4Ω or 1Ω mono impedance at the amplifier.

Parallel (1Ω Impedance)

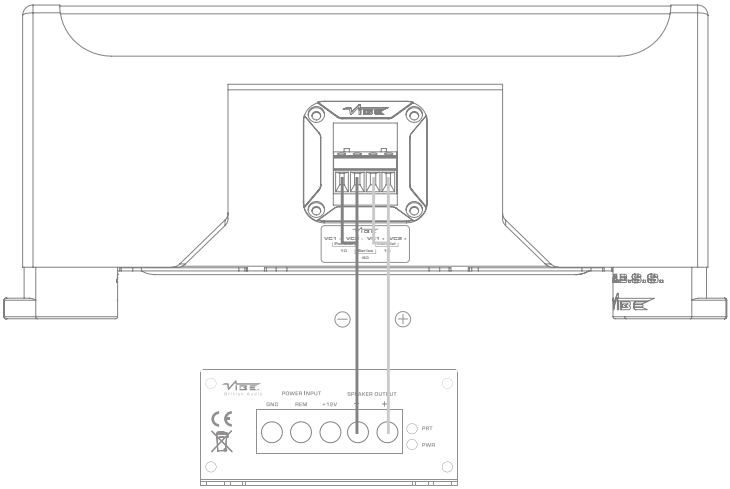

Recommended amplifier : POWERBOX400.1M-V7

Series (4Ω Impedance)

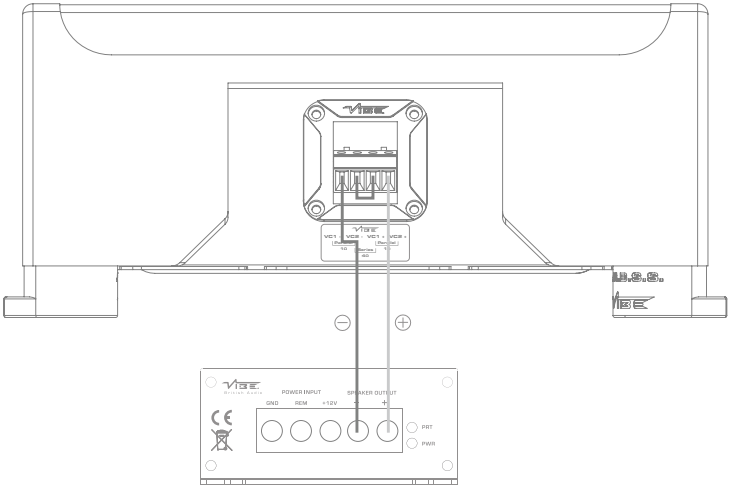

Recommended amplifier : POWERBOX400.1M-V7

Wiring Diagram (BA10ASQ-V4)

The BA10ASQ-V4 comes loaded with a POWERBOX400.1M-V7 monoblock amplifier wired for 1Ω impedance to maximise available power.

For initial wiring and setup, it will be necessary to remove the amplifier from the enclosure.

To remove the amplifier, simply remove the 2pcs securing screws and slide the amplifier downwards.

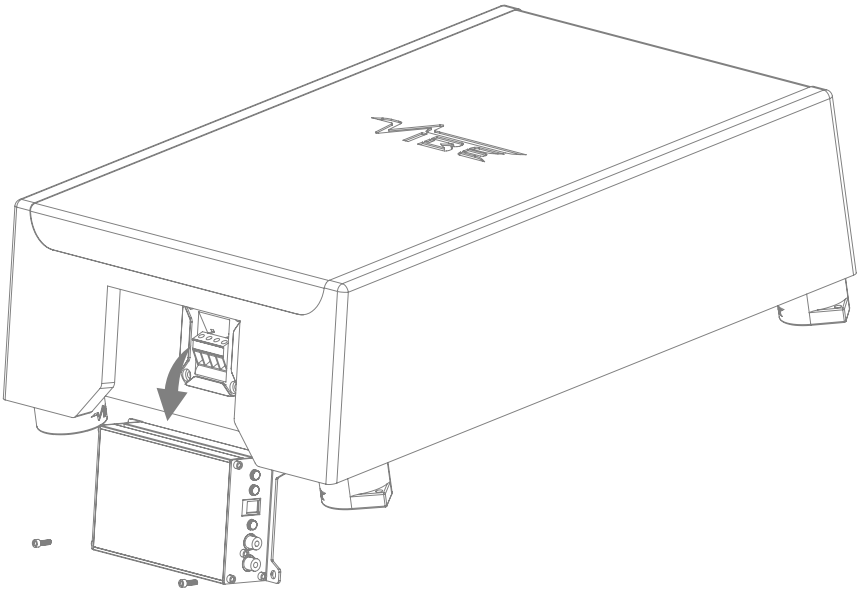

Power Connections

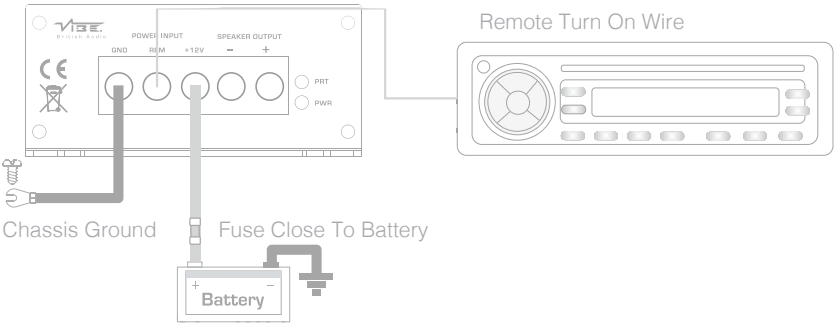

Low Level Input

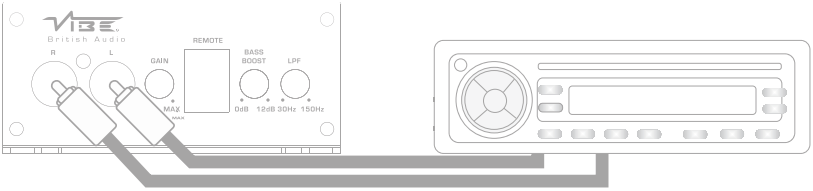

High Level Input

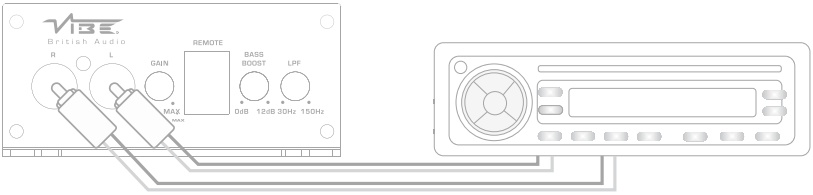

NOTE : When using high level input it is not necessary to connect the remote turn on wire.

Power Cable

- At least 10 gauge cable should be used for the power connection to the amplifier.
- The power cable should be taken directly from the battery. Rubber grommets should be used when passing through any bulkheads to prevent the cable from becoming chaffed or cut.
- It is vital that a 40 amp fuse / circuit breaker is placed inline with the power cable and is no further than 18 inches away from the battery.
- Please ensure that the fuse is not fitted until the entire installation procedure is complete.

Ground Cable

- At least 10 gauge cable should be used for the ground connection to the amplifier.
- The amplifier ground should be connected directly to the chassis of the vehicle, to bare metal.
- The cable length should be kept to an absolute minimum.
- It is not recommended that you connect the ground cable to the vehicles seatbelts anchor point.

Auto Turn On (High level Input Only)

- The Powerbox amplifiers feature an auto turn on circuit called Autosense.
- This circuit allows the amplifier to switch on and off without a remote turn on wire when using high level input, for low level input (RCA) it will still be necessary to connect the remote turn on wire from the headunit.
- When the connected source (headunit) is turned on the amplifier will turn on automatically, after the connected source (headunit) is turned off the amplifier will shut down.
- It will be necessary to connect an RCA plug to the speaker output of yout headunit, please ensure correct polarity or a loss of bass will result
  Centre pin : Positive
  Outer pin : Negative

RCA Cables

- Please take extra care when running these cables from the source to the amplifier. Ensure that they are placed away from all items that can generate any interference, wiring harnesses etc.
- It is recommended that the RCA cables should be run on opposite sides of the car to the previously installed power cables if possible, to avoid the cable picking up interference.

Terminals And Connections

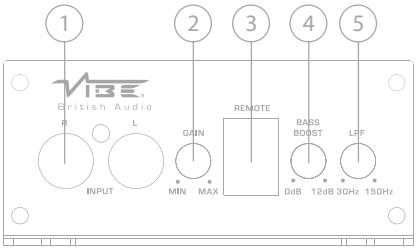

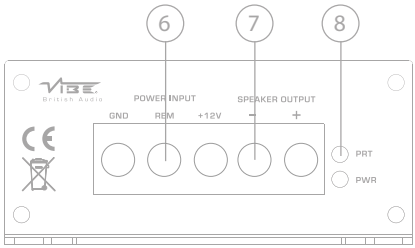

1. High / low level input
For connection to either the speaker output of your source (head unit) this is to be used if the source
(headunit) does not have a low level output or connection to any source (head unit) with a low level output. This is your RCA output from the source (headunit).
If using high level input, it will be necessary to connect an RCA plug to the speaker output of yout headunit, please ensure correct polarity or a loss of bass will result.
Centre pin : Positive
Outer pin : negative
2. Gain control
This control is used to match the input signal of the source to the amplifier. See the setup section for more details.
3. Remote level control port
For connection to the supplied remote level control for the amplifier.
4. Bass boost control
This control is used to add bass boost to the amplifier centred at 45Hz and is adjustable between 0 and +12dB
5. Low Pass Filter (LPF)
This control is used to set the crossover frequency for the amplifier when LPF is selected. The frequency is adjustable between 30Hz and 150Hz.
6. Power terminals
Used to connect DC power to the amplifier. See the power connections section for more details
7. Speaker terminals
Used to connect speaker cables to the amplifier. See the wiring configuration section for more details
8. Power / protect LED
If the amplifier is operating normally, the GREEN LED will illuminate.
If the amplifier is in protection mode the RED LED will illuminate.

NOTE:
When using high level input, the REM terminal will now output a +12v feed that can be used to turn other devices in the system that do not have auto turn on.

Set Up Section

To correctly set the gain control of the amplifier to match that of the source (headunit) use the
following setup routine:

- Turn the gain control to minimum on the amplifier.
- Ensure the bass boost on the headunt is set to 0 dB.
- Set all crossovers on the headunt (if applicable) to flat and both bass and treble to zero.
- Turn up the source (headunit) to approx 3/4 volume.
- Very slowly turn up the gain on the amplifier until distortion can be heard in any of the speakers or until the volume reaches an uncomfortable listening level, when this is reached turn the gain control down slightly.

The gain control is now set.

The setting of the crossover for a subwoofer, it is recommended that the crossover is set to low pass and the frequency is set to match that of the subwoofers specifications, or your
preferred frequency - this is usually around 60 - 120 Hz

Note: The smaller the speaker, the less bass it can handle.

By using the crossovers correctly you will not only lengthen the life of your speakers but you will also get better performance from them.

To optimise your setup seek the advise of a professional installation engineer or visit your local VIBE audio dealer.

Specification

Model	BA10SQ-V4	BA10ASQ-V4
Type	Passive Enclosure	Active Enclosure
Speaker Size	10” (261mm)	10” (261mm)
RMS Power	300 watts	300 watts
Peak Power	900 watts	900 watts
Height	5” (127mm)	5” (127mm)
Width	13.1” (332mm)	13.1” (332mm)
Depth	17.9” (455mm)	17.9” (455mm)
Impedance	Dual 2Ω	Dual 2Ω

International Technical Enquiries

For international technical support please contact the distribution agent for your country.
Please email **export@midbass.com** for more details.

UK Technical Enquiries

Call 0121 311 9090 : Option 4

Or email **technical@midbass.com**
Hours of business 9.00am - 5.30pm GMT Monday - Friday.
All calls are recorded for training purposes.
MIDBASS Distribution
PO Box 11000
B75 7WG

VIBE®

British Audio

black air

Designed and engineered in England

www.vibeaudio.co.uk

www.youtube.com/vibeaudio

www.facebook.com/vibeaudio

www.instagram.com/vibeaudio